Deck Construction

LATAH COUNTY DEPARTMENT OF PLANNING & BUILDING

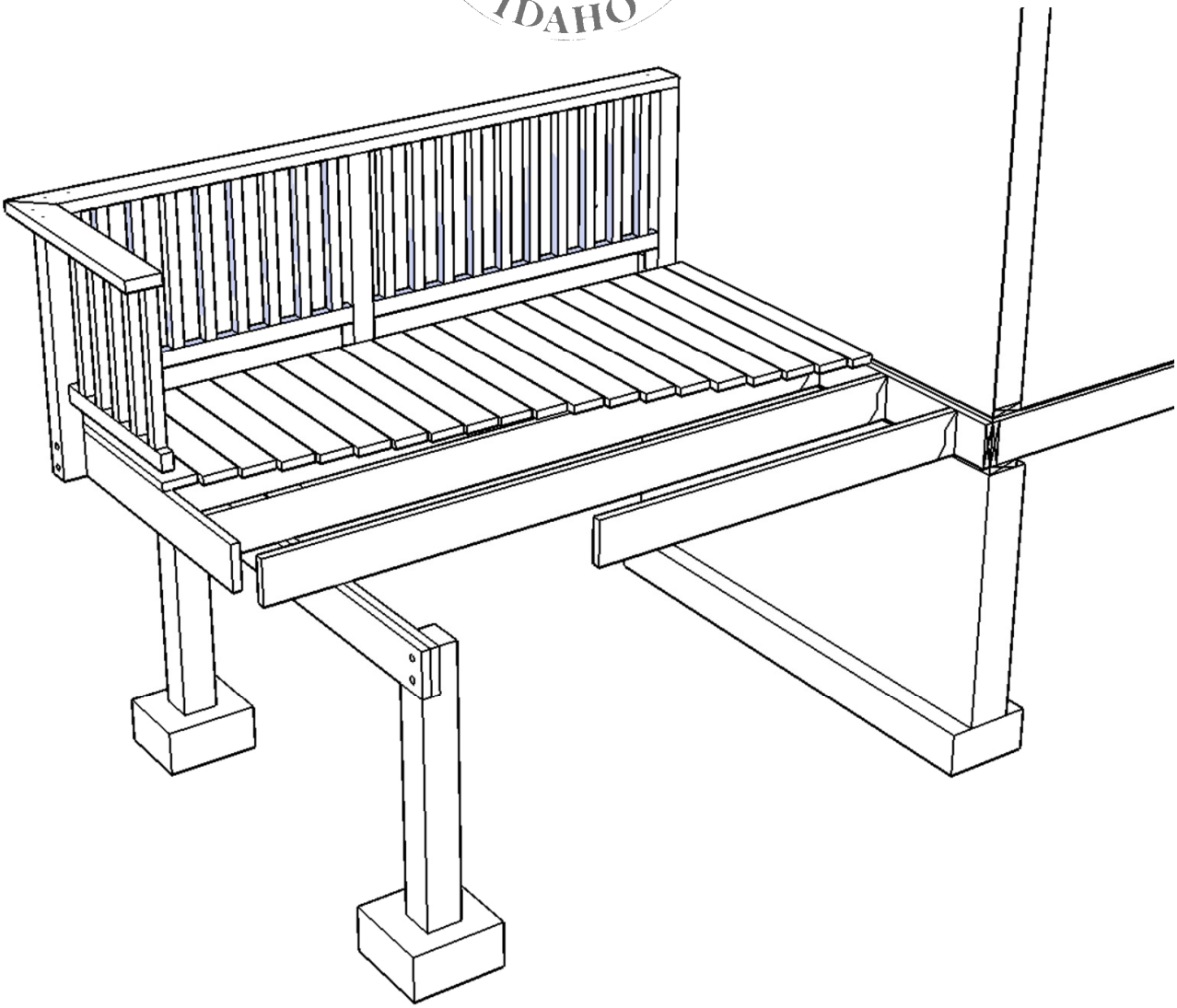

Where applicable, provisions and details contained in this document are based on the International Residential Code (IRC) [bracketed text references applicable sections of the IRC]. Deck structural failures result in the largest numbers of injuries and fatalities of all residential building failures. Railings and deck connections to the house are leading areas of failure. Experience has shown that wrapping beams and other non-preservative treated structural deck members with finish materials, may lead to accelerated deterioration of these members due to moisture retention. Proper techniques must be used to prevent moisture build-up. This handout suggests some methods to achieve safer deck construction and may assist in the design of specific deck plans. This design assistance sheet is intended to provide some basics of private residential deck construction. This document is not intended to preclude the use of other construction methods or materials not shown herein. Additional information can be found at libraries, home improvement stores, and building departments. Please note that while every effort is made to assure the accuracy of the information contained in this brochure it is not warranted for accuracy. This document is not intended to address all aspects or regulatory requirements for a project and should serve as a starting point for your investigation.

Contents

Deck Design 2
Permits 3
Footings 3
Post Requirements 4
Beam Requirements 5
Joist Requirements 6
Ledger Attachment 8
Deck Stability 9
Guardrails 10
Stairs and other info 11
Decking Material..... 11

Deck Design

- Decks shall be designed to sustain the minimum required dead and live loads as specified in the Building Code.
- This document does not apply to decks which will experience snow loads, snow drift loads, or sliding snow loads that exceed 40 psf. This document does not address wind or seismic design issues. Decks supporting large concentrated loads such as hot tubs are beyond the scope of this document. This document applies to single level residential wood decks only.
- All lumber shall be identified by the grade mark of, or certificate of inspection issued by, an approved lumber grading or inspection bureau or agency (www.alsc.org). All lumber in contact with the ground shall be approved preservative treated wood suitable for ground contact. [R317.1.2]
- All nails shall meet the requirements of ASTM F 1667. Threaded nails as stated in this document include helical (spiral) and annular (ring-shank) nails. Wood screws shall meet the requirements of ANSI/ASME B18.6.1. Bolts and lag screws shall meet the requirements of ANSI/ASME B18.2.1.
- Throughout this document, 1/2” diameter bolts and lag screws are specified for various connections. Edge distance and spacing requirements are based on 1/2” diameter fasteners. If larger (or smaller) fasteners are specified, edge distance and spacing needs to be adjusted.
- To resist corrosion, the following is required [R317.3]:
    1) All screws, bolts, and nails for use with preservative treated wood shall be hot-dipped zinc-coated galvanized steel, stainless steel, silicon bronze, or copper. Fasteners to be hot-dipped galvanized shall meet the requirements of ASTM A153, Standard Specification/or Zinc Coating (Hot-Dip) on Iron and Steel Hardware, Class D for fasteners 3/8” diameter and smaller or Class C for fasteners with diameters over 3/8”.
    2) Fasteners other than nails and timber rivets shall be permitted to be of mechanically deposited zinc-coated steel with coating weights in accordance with *ASTM B 695*, Class 55, minimum.
    3) All hardware (joist hangers, cast-in-place post anchors, etc.) shall be galvanized or shall be stainless steel. Hardware to be hot-dipped prior to fabrication shall meet *ASTM A 653, Standard Specification for steel Sheet, Zinc-Coaled (Galvanized) or Zinc-Iron Alloy-Coated (Galvannealed) by the Hot-Dip Process*, G-18S coating. Hardware to be hot-dipped galvanized after fabrication shall meet *ASTM A123, Specification for Zinc (Hot-Dip Galvanized) Coatings on Iron and Steel Products.*
    4) Other coated or non-ferrous fasteners or hardware shall be as approved by the authority having jurisdiction.
    5) Flashing shall be corrosion-resistant metal [R703.8] of minimum nominal 0.019-inch thickness or approved non-metallic material. Aluminum should not be used in direct contact with lumber treated with preservatives that contain copper such as ACQ, Copper Azole, or ACZA.

Permits

All decks in Latah County require building permits. An application and drawings of the deck must be submitted to the building department for review and approval before any construction begins. Decks shall not be used or occupied until final inspection and approval is obtained.

Submittal Drawing Information Required:

- Drawings to scale, preferably 1/4" = 1', showing all dimensions.
- Specify wood species and grade.
- Specify floor joist sizes and spacing.
- Specify floor beam type and sizes.
- Specify post size, type, and spacing.
- Specify footing depth, thickness, and size.
- Specify any connections, post bases, hangars, ledger, lags, post-beam connections.
- Specify any other relevant information such as guardrails, handrails, stairs.
- For covered decks, specify all necessary roof members and connections.

Footings

See Figure 2. and Table 1. for footing size, footing thickness, and post attachment options and requirements. All footings shall bear on solid ground and shall be placed at least 12 inches below the undisturbed ground surface or below the frost line, whichever is deeper. Bearing conditions shall be verified in the field by the building official prior to placement of concrete. Where the building official determines that in-place soils with an allowable bearing capacity of less than 1,500 psf are likely to be present at the site, the allowable bearing capacity shall be determined by a soils investigation. Pre-manufactured post anchors shall be galvanized. See "Deck Design". Table for footing sizes does not take into account additional loading from roof structure for covered decks.

Table 1. Footing Sizes

40LBS LIVE LOAD ONLY (SNOW LOAD)

Beam Span (L_b)	Joist Span (L_j)	Round Footing Diameter[1]	Square Footing Dimension[1]	Footing Thickness[2]
6'	≤ 10'	15"	13"	8"
	≤ 14'	17"	15"	8"
	≤ 18'	20"	18"	8"
8'	≤ 10'	17"	15"	8"
	≤ 14'	20"	18"	8"
	≤ 18'	23"	21"	9"
10'	≤ 10'	19"	17"	8"
	≤ 14'	22"	20"	9"
	≤ 18'	25"	23"	10"
12'	≤ 10'	21"	19"	8"
	≤ 14'	24"	22"	10"
	≤ 18'	28"	26"	11"
14'	≤ 10'	22"	20"	9"
	≤ 14'	26"	24"	11"
	≤ 18'	30"	28"	12"
16'	≤ 10'	24"	22"	9"
	≤ 14'	28"	26"	12"
	≤ 18'	32"	30"	13"
18'	≤ 10'	25"	23"	10"
	≤ 14'	30"	28"	12"
	≤ 18'	34"	32"	14"

1 Assumes 1,500 psf soil bearing capacity.

2 Assumes 2.500 psi compressive strength of concrete. Coordinate footing thickness with post base and anchor requirements.

Figure 1. Typical Footing Options

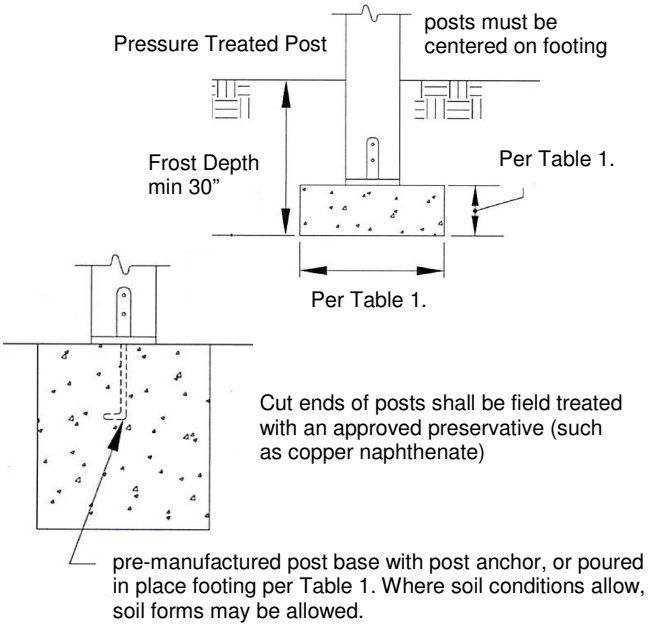

Post Requirments

All deck post sizes shall be 6x6 (nominal) or larger and the maximum height shall be 14'-0" measured to the underside of the beam. 4x4 posts are permitted but shall not exceed 48" (inches) in height. Posts shall be centered on footings. Cut ends of pressure treated posts shall be field treated with an approved preservative (such as copper naphthenate) [R402.1.2]. The beam shall be attached to the post by notching the 6x6 as shown in Figure 2 or by providing an approved post cap to connect the beam and post as shown in Figure 4. All 3-ply beams shall be connected to the post by a post cap. All posts shall provide full bearing for beams. All thru-bolts shall have washers under the bolt head and nut. Attachment of the beam to the side of the post without notching is prohibited (see Figure 3). All posts shall provide full bearing for beams. For covered decks, post beam connection requirements still apply to posts that extend through deck upward to support roof structure (See Figure 5).

Figure 2. Approved Post-to-Beam Attachment

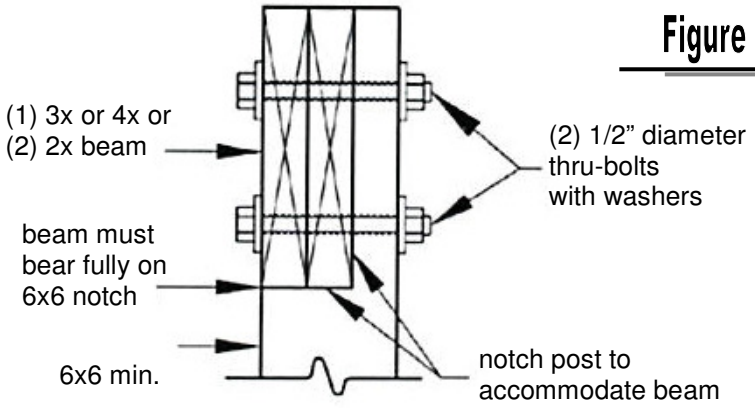

Figure 3. Prohibited Post-to-Beam Connection

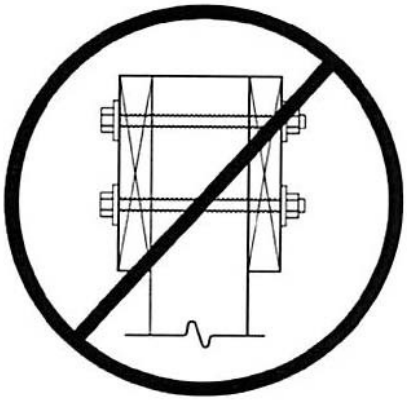

Figure 4. Alternate Approved Post-to-Beam Attachment

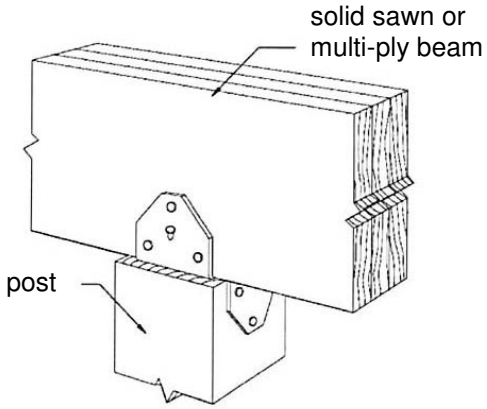

Figure 5. Beam to Extended Post Connection

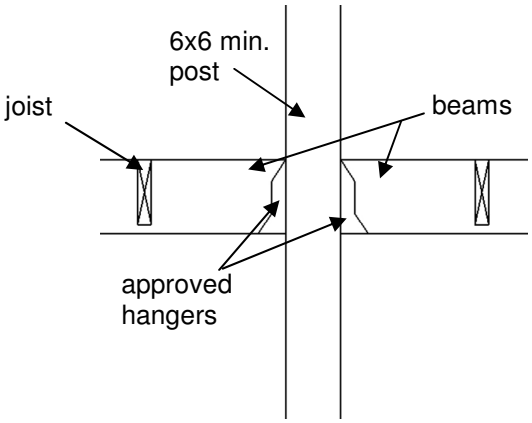

Beam Requirements

Deck beam spans shall be in accordance with Table 2 and can extend past the post centerline up to $L_b/4$ as shown in Figure 6. Joists may bear on the beam and extend past the beam centerline up to $L_j/4$ as shown in Figures 8 and 10, or the joists may attach to the side of the beam with joist hangers as shown in Figure 9. Where multiple 2x members are used, the deck's beam is assembled by attaching the members identified in Table 2 in accordance with Figure 7. [Table R602.3(1)]

Table 2. Deck Beam Spans L_b[1]

Species	Size[4]	Joist Spans (Lj) Less Than or Equal to: 6'	8'	10'	12'	14'	16'	18'
Douglas Fir-Larch[2], Hem-Fir[2], SPF[2], Redwood, Western Cedars, Ponderosa Pine[3], Red Pine[3]	3x6 or 2-2x6	5'-5"	4'-8"	4'-2"	3'-10"	3'-6"	3'-1"	2'-9"
	3x8 or 2-2x8	6'-10"	5'-11"	5'-4"	4'-10"	4'-6"	4'-1"	3'-8"
	3x10 or 2-2x10	8'-4"	7'-3"	6'-6"	5'-11"	5'-6"	5'-1"	4'-8"
	3x12 or 2-2x12	9'-8"	8'-5"	7'-6"	6'-10"	6'-4"	5'-11"	5'-7"
	4x6	6'-5"	5'-6"	4'-11"	4'-6"	4'-2"	3'-11"	3'-8"
	4x8	8'-5"	7'-3"	6'-6"	5'-11"	5'-6"	5'-2"	4'-10"
	4x10	9'-11"	8'-7"	7'-8"	7'-0"	6'-6"	6'-1"	5'-8"
	4x12	11'-5"	9'-11"	8'-10"	8'-1"	7'-6"	7'-0"	6'-7"
	3-2x6	7'-4"	6'-8"	6'-0"	5'-6"	5'-1"	4'-9"	4'-6"
	3-2x8	9'-8"	8'-6"	7'-7"	6'-11"	6'-5"	6'-0"	5'-8"
	3-2x10	12'-0"	10'-5"	9'-4"	8'-6"	7'-10"	7'-4"	6'-11"
	3-2x12	13'-11"	12'-1"	10'9"	9'-10"	9'-1"	8'-6"	8'-1"

1 Assumes 40 psf live load, 10 psf dead load, L/360 defelction limit, L/180 cantilever deflection limit, No. 2 grade, and wet service conditions.

2 Incising assumed for refractory species including Douglas fir-larch, hem-fir, and spruce-pine-fir.

3 Design values based on northern species with no incising assumed.

4 Beam depth must be equal to or greater than joist depth if joist hangers are used.

Figure 6. Deck Beam Span Types

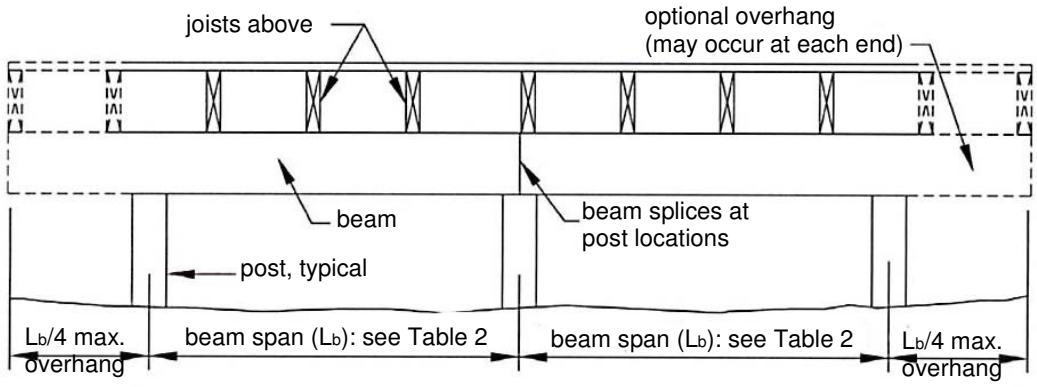

Figure 7. Deck Beam Assembly Details

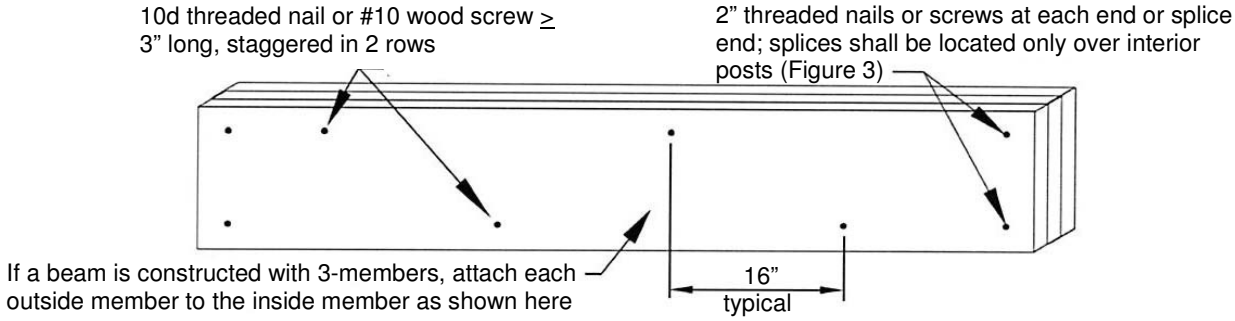

Joist Requirements

The span of a joist is measured from the centerline of bearing at one end of the joist to the centerline of bearing at the other end of the joist and does not include the length of the overhangs. Use Table 3 to determine joist span based on lumber size and joist spacing. Use Table 4 for wood treated with pressure preservatives. See Figure 8 through Figure 10 for joist span types.

Table 3. Non-Treated Joist Spans

FOR USE WITH NON-PRESSURE TREATED WOOD

		Joist Spacing (o.c.)					
		Without Overhangs[1]			With Overhanges up to Lj/4[2]		
Species	Size	12"	16"	24"	12"	16"	24"
Douglas Fir-Larch	2x6	10'-9"	9'-9"	8'-1"	8'-6"	8'-6"	8'-1"
	2x8	14'-2"	12'-7"	10'-3"	10'-9"	10'-9"	10'-3"
	2x10	17'-9"	15'-5"	12'-7"	15'-5"	15'-5"	12'-7"
	2x12	20'-7"	17'-10"	14'-7"	20'-7"	17'-10"	14'-7"
Hem-fir	2x6	10'-0"	9'-1"	7'-11"	8'-3"	8'-3"	7'-11"
	2x8	13'-2"	12'-0"	10'-2"	10'-8"	10'-8"	10'-2"
	2x10	16'-10"	15'-2"	12'-5"	15'-2"	15'-2"	12'-5"
	2x12	20'-4"	17'-7"	14'-4"	20'-7"	17'-7"	14'-4"
Southern Pine	2x6	10'-9"	9'-9"	8'-6"	9'-0"	9'-0"	8'-6"
	2x8	14'-2"	12'-10"	11'-0"	11'-7"	11'-7"	11'-0"
	2x10	18'-0"	16'-1"	13'-1"	16'-1"	16'-1"	13'-1"
	2x12	21'-9"	18'-10"	15'-5"	21'-9"	18'-10"	15'-5"
Spruce-Pine-Fir	2x6	10'-3"	9'-4"	8'-1"	8'-6"	8'-6"	8'-1"
	2x8	13'-6"	12'-3"	10'-3"	10'-9"	10'-9"	10'-3"
	2x10	17'-3"	15'-5"	12'-7"	15'-5"	15'-5"	12'-7"
	2x12	20'-7"	17'-10"	14'-7"	20'-7"	17'-10"	14'-7"

1 Assumes 40 psf live load, 10 psf dead load, L/360 defelction, No. 2 grade, and wet service conditions. See Figure 9.

2 Assumes 40 psf live load, 10 psf dead load, L/180 cantilever defl ection with 220 lb point load, No. 2 grade, and wet service conditions. See Figure 8 and Figure 10.

Table 4. Treated Joist Spans

FOR USE WITH PRESSURE TREATED WOOD

		Joist Spacing (o.c.)					
		Without Overhangs			With Overhanges up to Lj/4		
Species	Size	12"	16"	24"	12"	16"	24"
Southern Pine	2x8	13'-8"	12'-5"	10'-2"	10'-9"	10'-9"	10'-2"
	2x10	17'-5"	15'-10"	13'-1"	15'-6"	15'-6"	13'-1"
	2x12	18'-0"	18'-0"	15'-5"	18'-0"	18'-0"	15'-5"
Douglas Fir-Larch, Hem-fir, SPF[3]	2x8	12'-6"	11'-1"	9'-1"	9'-5"	9'-5"	9'-1"
	2x10	15'-8"	13'-7"	11'-1"	13'-7"	13'-7"	11'-1"
	2x12	18'-0"	15'-9"	12'-10"	18'-0"	15'-9"	12'-10"
Redwood, Western Cedars, Ponderosa Pine[4], Red Pine[4]	2x8	11'-8"	10'-7"	8'-8"	8'-6"	8'-6"	8'-6"
	2x10	14'-11"	13'-0"	10'-7"	12'-3"	12'-3"	10'-7"
	2x12	17'-5"	15'-1"	12'-4"	17'-5"	15'-1"	12'-4"

1 Assumes 40 psf live load, 10 psf dead load, l/360 defelction, No. 2 grade, and wet service conditions. See Figure 9.

2 Assumes 40 psf live load, 10 psf dead load, L/180 cantilever defl ection with 220 lb point load, No. 2 grade, and wet service conditions. See Figure 8 and Figure 10.

3 Incising assumed for refractory species including Douglas fi r-larch, hem-fi r, and spruce-pine-fi r.

4 Design values based on northern species with no incising assumed.

Figure 8. Joist Span - Deck Attached at House and Bearing Over Beam

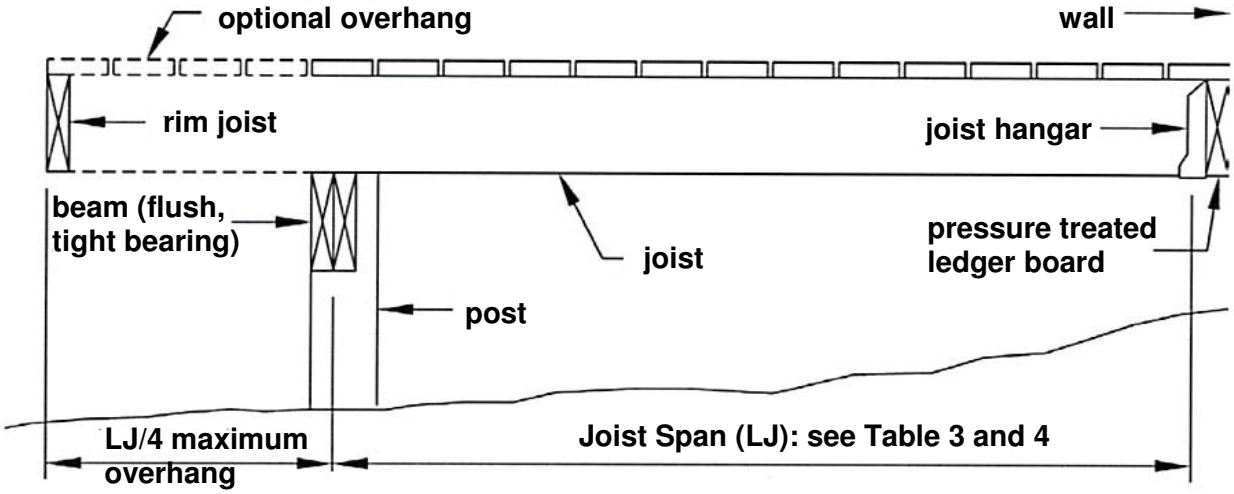

Figure 9. Joist Span - Deck Attached at House and Bearing Over Beam

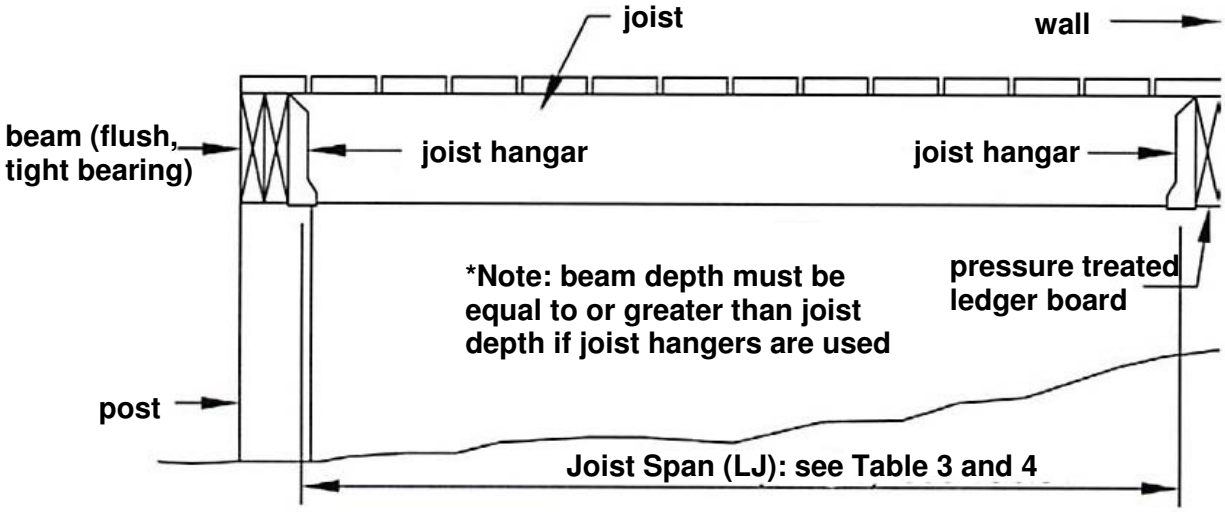

Figure 10. Joist Span - Deck Attached at House and Bearing Over Beam

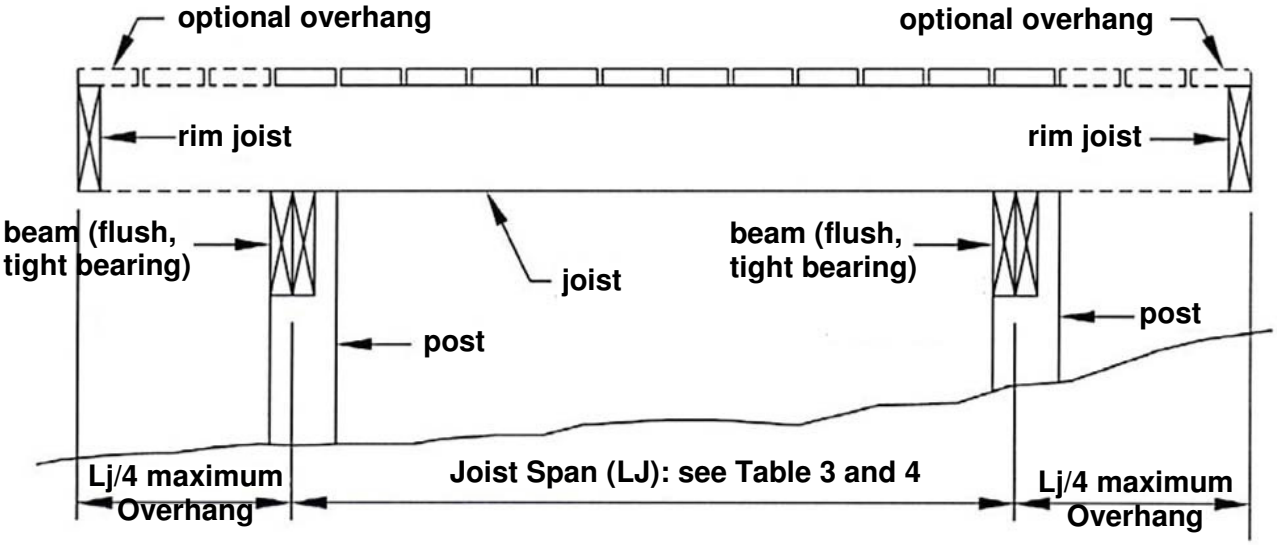

Deck Ledger

Ledger boards shall be pressure treated material. Attach the ledger board, which shall be equal to or greater than the deck joist depth but less than or equal to the rim joist depth, to the existing exterior wall in accordance with Figure 11 and 12. When attachments are made to the existing house band joist, the band joist shall be capable of supporting the new deck. If this cannot be verified or conditions at the existing house differ from the details herein, then either a free-standing deck or full plan submission is required. Other types of ledger fasteners must be approved by the building official and installed per the manufacturer's instructions.

Figure 11.

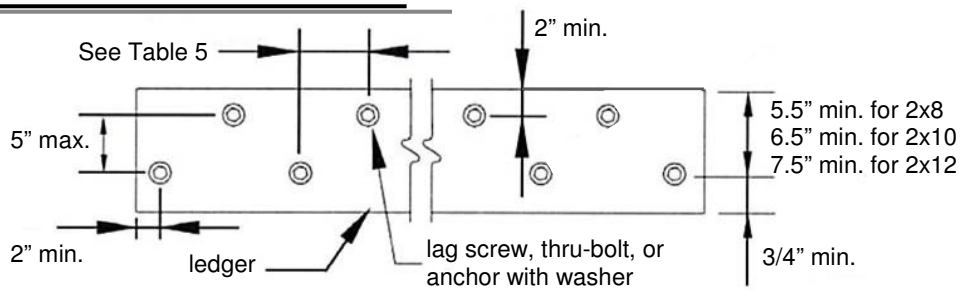

Table 5. Fastener Spacing

Connection Details	Rim Board or Band Joist	Joist Span: 6'-0" and less	6'-1" to 8'-0"	8'-1" to 10'-0"	10'-1" to 12'-0"	12'-1" to 14'-0"	14'-1" to 16'-0"	16'-1" to 18'-0"
1/2" diameter screw with 15/32" maximum sheathing[1]	1" EWP_2	24"	18"	14"	12"	10"	9"	8"
	1-1/8" EWP_2	28"	21"	16"	14"	12"	10"	9"
	1-1/2" Lumber[3]	30"	23"	18"	15"	13"	11"	10"
1/2" diameter bolt with 15/32" maximum sheathing[1]	1" EWP_2	24"	18"	14"	12"	10"	9"	8"
	1-1/8" EWP_2	28"	21"	16"	14"	12"	10"	9"
	1-1/2" Lumber[3]	36"	36"	34"	29"	24"	21"	19"
1/2" diameter bolt with 15/32" maximum sheathing and 1/2" stacked washers[1,4]	1" EWP_2	24"	18"	14"	12"	10"	9"	8"
	1-1/8" EWP_2	28"	21"	16"	14"	12"	10"	9"
	1-1/2" Lumber[3]	36"	36"	29"	24"	21"	18"	16"

1 The tip of the lag screw shall fully extend beyond the inside face of the band joist.
2 Ledger attachment to engineered wood products shall be designed in accordance with accepted engineering practice.
3 A minimum 1"x9-1/2" Douglas fir-larch laminated veneer lumber rim board shall be permitted in lieu of 2" nominal band joist.
4 Sheathing not exceeding 1" shall be permitted. The maximum distance between the face3 of the ledger board and the face of the band joist shall be one inch.

House siding or the exterior finish system must be removed prior to installation of the ledger board. Approved corrosion resistant flashing is required at any ledger board connection to a wall of wood framed construction (see MINIMUM REQUIREMENTS). See Figure 12 for continuous flashing with drip edge. The threshold shall be carefully flashed and caulked to prevent water intrusion due to splash from the deck or melting snow and ice.

Figure 12.

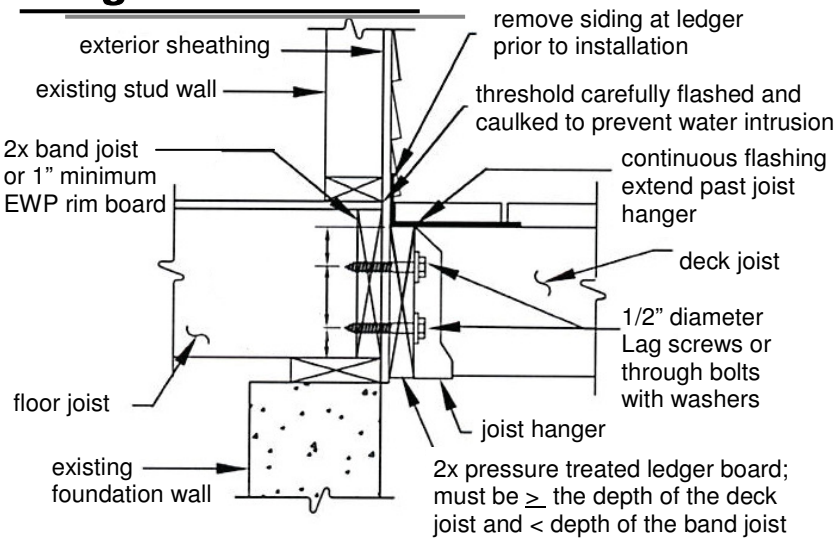

Deck Stability

Decks greater than 4 feet above grade shall be provided with additional construction for lateral restraint. Free-standing decks shall be provided with diagonal bracing both parallel and perpendicular to the beam at each post as shown in Figure 13. When parallel to the beam, the bracing shall be bolted to the post at one end and beam at the other. When perpendicular to the beam, the bracing shall be bolted to the post at one end and a joist or blocking between joists at the other. When a joist does not align with the bracing location provide blocking between the adjacent joists. Free-standing decks attached to the house as shown in Figure 14 do not require diagonal bracing perpendicular to the house. Diagonal bracing parallel to the house may be omitted at the beam adjacent to the house for a free-standing deck attached as shown in Figure 15.

Figure 13.

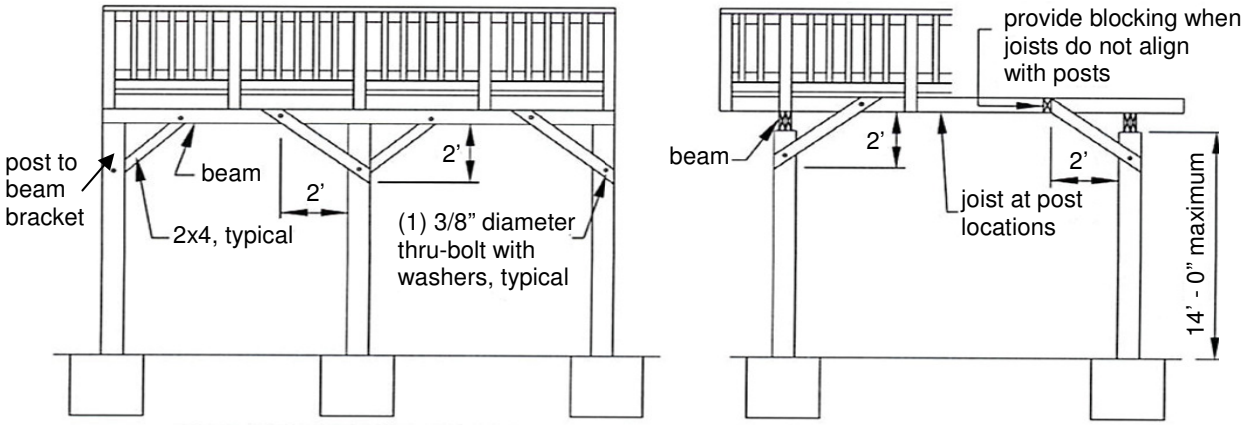

(BRACING PARALLEL TO BEAM) (BRACING PERPENDICULAR TO BEAM)

Attach the free-standing deck rim joist to the existing house exterior wall as shown in Figure 14.The wall must be sheathed with minimum 3/8" wood structural panel sheathing. Fasteners shall be 16" on center and staggered in 2 rows. Flashing over the rim joist is required and must be installed in accordance with the ledger flashing provisions.

Decks that are supported by an attached ledger shall be positively anchored to the primary structure and designed for both vertical and lateral loads as applicable [R502.2.2]. The lateral load connection required is permitted to be in accordance with Figure 15. Hold down tension devices shall be provided in not less than two locations per deck, and each device shall have an allowable stress design capacity of not less than 1,500 lb [R502.2.2.3].

Figure 14.

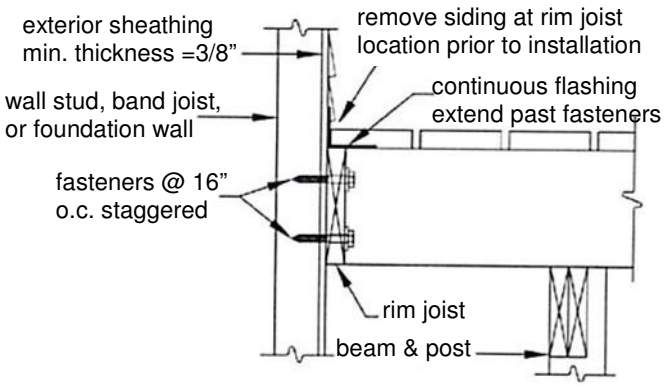

Figure 15.

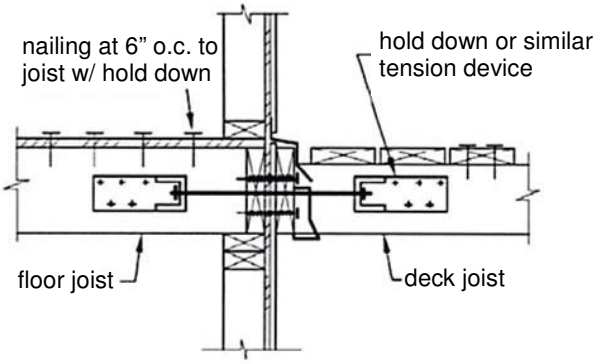

Guardrails

All decks greater than 30” above grade are required to have a guard [R312.1]. (See “Stairs Landings, Guardrails” Handout for additional details). Other methods and materials may be used for guard construction when installed according to the manufacturers installation instruction, or as approved by the authority having jurisdiction. Deck guard posts shall be a minimum 4x4 (nominal) with an adjusted bending design value not less than 1,100 psi. Guard posts for guards which run parallel to the deck joists shall be attached to the outside joist per Figure 16. Guard posts for guards that run perpendicular to the deck joists shall be attached to the rim joist in accordance with Figure 17. Only hold down anchor models meeting these minimum requirements shall be used. Hold down anchors shall have a minimum allowable tension load of 1,800 pounds for a 36” maximum rail height and be installed in accordance with the manufacturer’s instructions.

Figure 16. Guardrail Post Attached to Outside Joist

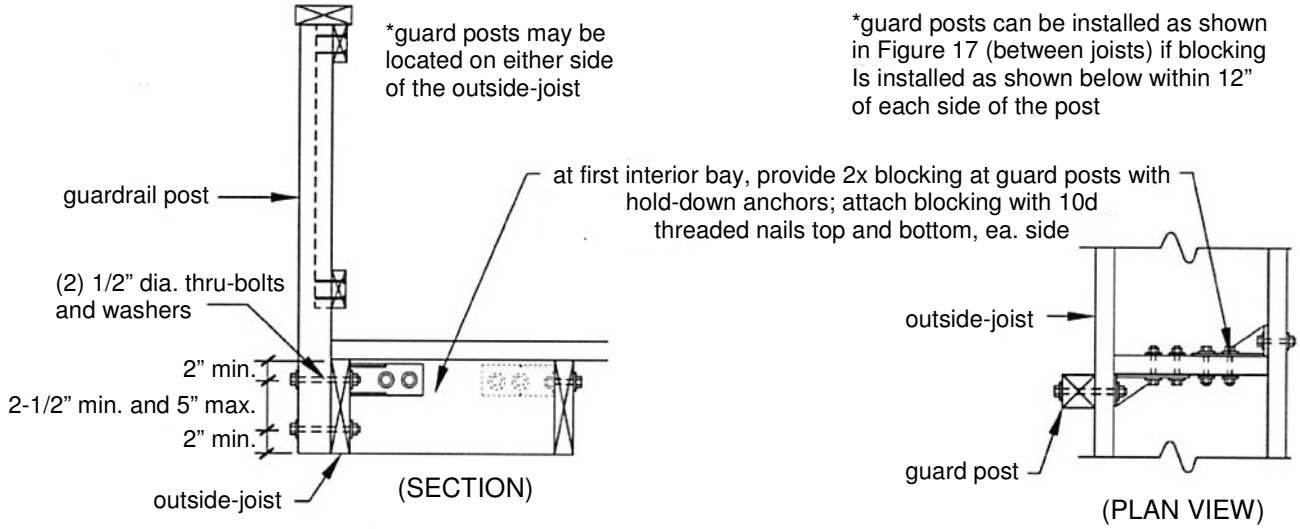

Figure 17. Guardrail Post Attatched to Rim Joist

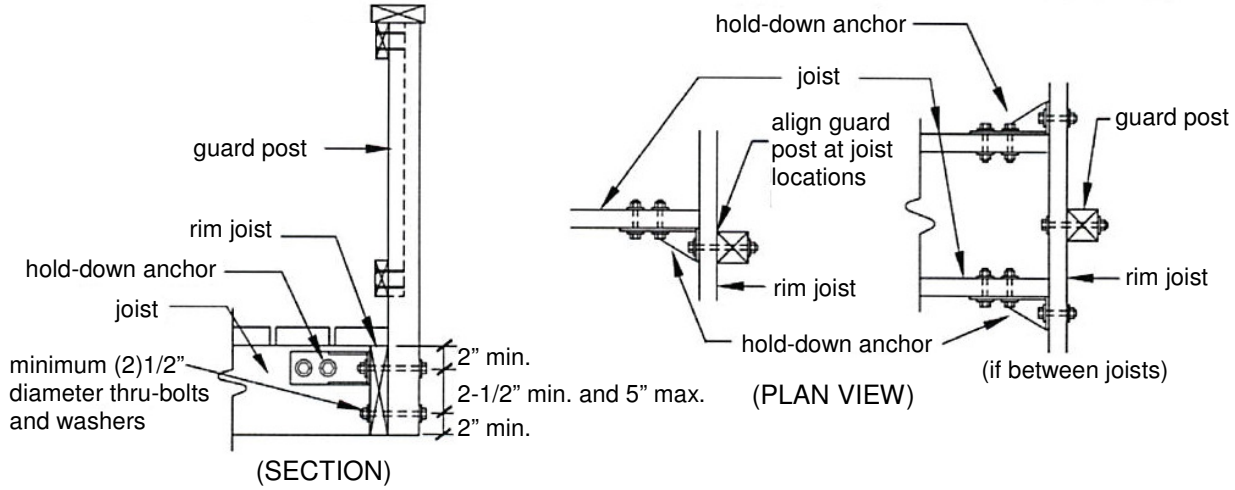

Stairs, Handrails, Landings, and Guardrails

Deck stairs, landings, guardrails, and handrails must meet the code requirements for respective elements found inside and a part of residents. For additional information on these code requirements, see the “Stairs, Guardrails, and Landings” handout.

Decking Material

All decking material shall be composite or dimension lumber (2” nominal thickness) or span rated decking in accordance with the American Lumber Standard Committee *Policy for Evaluation of Recommended Spans for Span Rated Decking Products (November 5, 2004*). Attach decking to each joist with 2-8d threaded nails or 2-#8 screws. Space decking boards approximately 1/8” apart. See Figure 18. for decking connection requirements at the rim joist. Decking may be placed from an angle perpendicular to the joists to an angle of 45 (reduced joist spacing may be required). Each segment of decking must bear on a minimum of 4 joists (or 4 supports).

Figure 18.

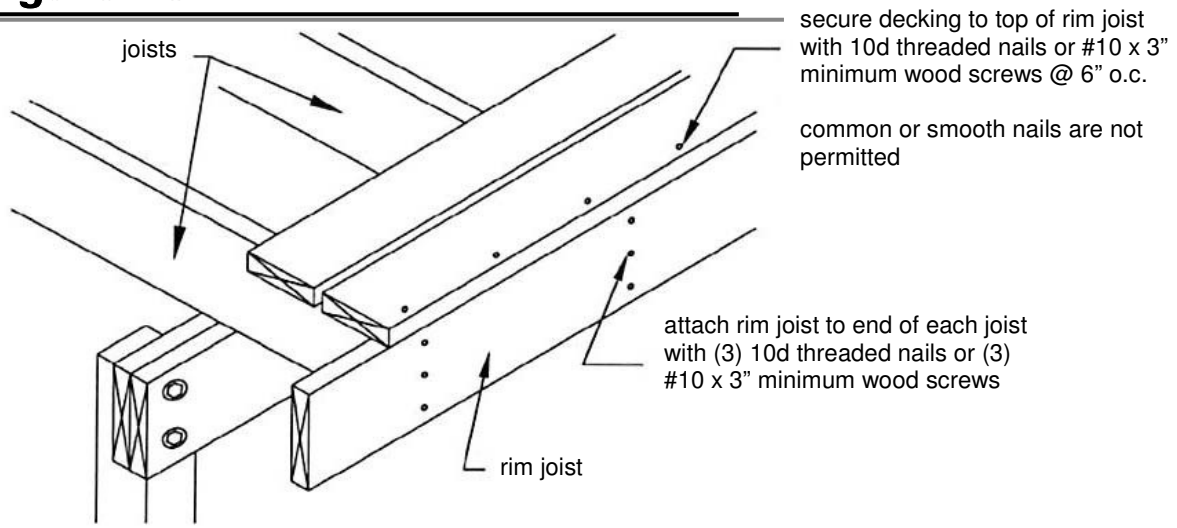

Some of the text and images contained in this brochure have been extracted from various Publications and are the courtesy of the International Code Council, and the American Wood Council. While every effort has been made to insure the accuracy of the information presented, jurisdictions as indicated on this brochure do not assume responsibility for errors and omissions in this document. Those using this document assume all liability arising from its use.

Please note that while every effort is made to assure the accuracy of the information contained in this brochure it is not warranted for accuracy. This document is not intended to address all aspects or regulatory requirements for a project and should serve as a starting point for your investigation. For detailed information on a particular project, permit, or code requirement refer directly to applicable file and/or code/regulatory documents or contact the appropriate division or staff .